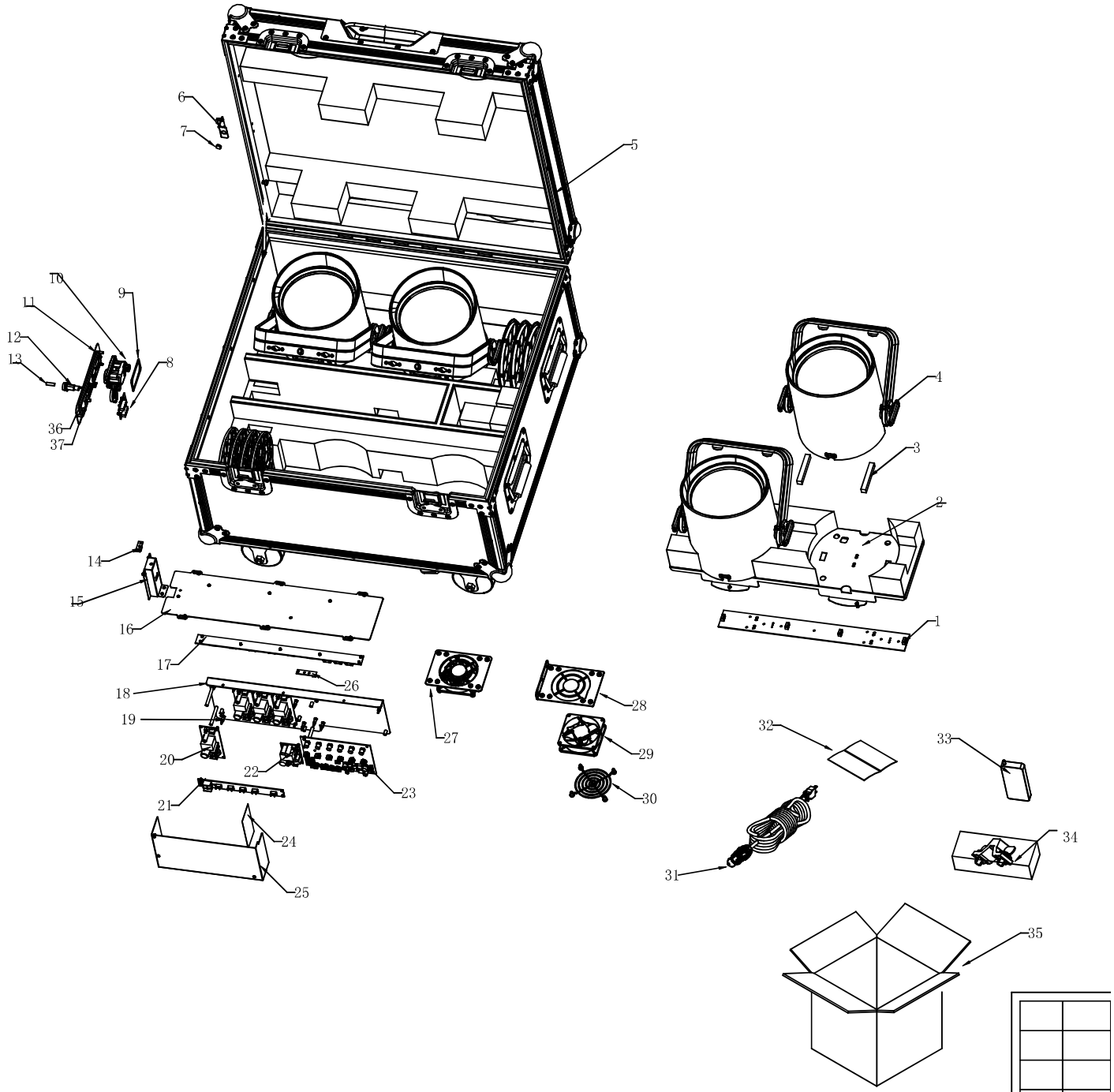
6
7
5
10
9
11
12
13
8
36
37
4
3
2
14
15
16
1
17
26
18
19
27
28
29
20
22
23
30
32
33
21
24
31
34
25
35

EXPLODED DIAGRAM REF STATIC	FIXTURE	PartNumber	Description
1	WELLPOD3X4	PTJ21004458A	DMX PCB B (BOM#1)
2	WELLPOD3X4	PTJ61109703C	CHARGING BASE B (BOM#2)
3	WELLPOD3X4	PTJ32001542	FORM GASKET (BOM#3)
4	WELLPOD3X4	PTJ03032041	SINGEL WELLPOD3 (BOM#4)
5	WELLPOD3X4	PTJ13001746	WELLPOD3X4 Complete Road Case with Charger (BOM#5)
5	WELLPOD3X4	PTJ55000492B	ROAD CASE (BOM#5)
6	WELLPOD3X4	PTJ61107735A	MEGNET HOLDER (BOM#6)
7	WELLPOD3X4	PTJ39900054A	MEGNET (BOM#7)
8	WELLPOD3X4	PTJ21004656	INDICATOR PCB (BOM#8)
9	WELLPOD3X4	PTJ61103571A	POWER SOCKET HOLDER (BOM#9)
10	WELLPOD3X4	PTJ33300053	IP POWER IN/OUT SOCKET (BOM#10)
11	WELLPOD3X4	PTJ61110330	POWER SOCKET PLATE (BOM#11)
12	WELLPOD3X4	PTJ3027001001	FUSE HOLDER (BOM#12)
13	WELLPOD3X4	PTJ49900002	FUSE (BOM#13)
14	WELLPOD3X4	PTJ21001816	HALL ELEMENT LOCATER J (BOM#14)
15	WELLPOD3X4	PTJ61107727A	HALL ELEMENT LOCATER (BOM#15)
16	WELLPOD3X4	PTJ61109702A	CHARGING PLATE (BOM#16)
17	WELLPOD3X4	PTJ21004460	DMX PCB A (BOM#17)
18	WELLPOD3X4	PTJ61010469	PLATE FOR THE MPCB (BOM#18)
19	WELLPOD3X4	PTJ32100523	SPACER SUPPORT (BOM#19)
20	WELLPOD3X4	PTJ33000471	POWER SUPLLY (BOM#20)
21	WELLPOD3X4	PTJ21004459	DMX PCB C (BOM#21)
22	WELLPOD3X4	PTJ33000439	PSU (BOM#22)
23	WELLPOD3X4	PTJ21003848B	MPCB (BOM#23)
24	WELLPOD3X4	PTJ32700174	MYLAR (BOM#24)
25	WELLPOD3X4	PTJ61109704	POWER COVER (BOM#25)
26	WELLPOD3X4	PTJ21000701	LIGHT SENSATION PCB (BOM#26)
27	WELLPOD3X4	PTJ61008557A	FAN HOLDER A (BOM#27)
28	WELLPOD3X4	PTJ61010470	FAN HOLDER B (BOM#28)
29	WELLPOD3X4	PTJ33200260B	FAN (BOM#29)
30	WELLPOD3X4	PTJ33200015	FAN NET (BOM#30)
31	WELLPOD3X4	PTJ23100149B	POWER CABLE (US) (BOM#31)
32	WELLPOD3X4	PTJ54001164A	QRG (BOM#32)
33	WELLPOD3X4	PTJ72000565	RFC REMOTE (BOM#33)
34	WELLPOD3X4	PTJ72000136C	OMEGA BRACKET (BOM#34)
35	WELLPOD3X4	PTJ52003135C	OUTER BOX (BOM#35)
36	WELLPOD3X4	PTJ32000117	HM SCREW (BOM#36)
37	WELLPOD3X4	PTJ32000338	NUT (BOM#37)
N/A	WELLPOD3X4	PTJ14000960	Wellpod3X4 Charging plate kit (2plates-Foams:4long/6small)